FITTING OF THE LOWER GRILLE AND THE RADIATOR GRILLE ON THE FRONT BUMPER :

1. Special tools

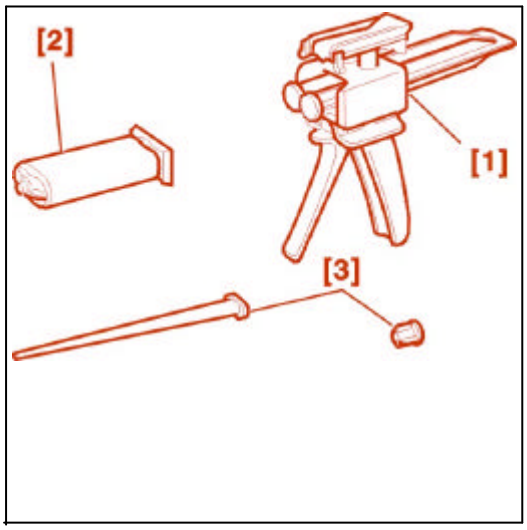

Figure : C5CF048C

Bonding kit :

- [1] Application gun
- [2] Adhesive (compound type for body parts)
- [3] Mixing nozzle

N.B. : The cartridge is re-usable, close it securely after use .

2. Fitting

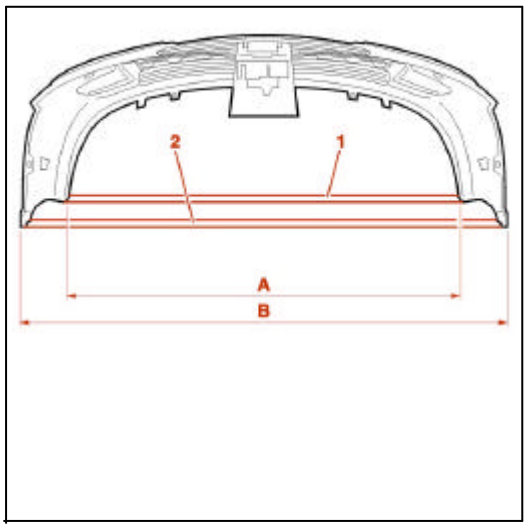

Figure : C4AF1EDC

Place the bumper on a stand .
Guarantee the gap dimension using adhesive strips (1) and (2) .
A = 1590 mm .
B = 1730 mm .

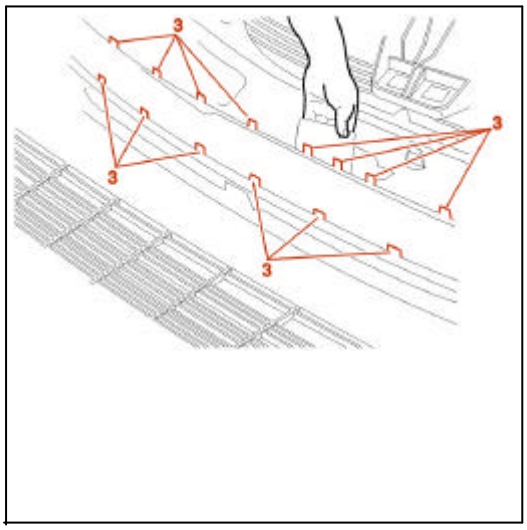

Figure : C4AF1EEC

Using abrasive paper 400, clean all the mounting tabs (1), on each surface .
With a cloth, degrease the mounting tabs using thinner .

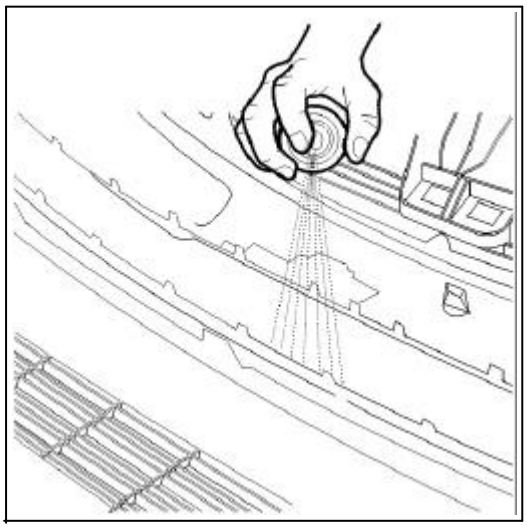

Figure : C4AF1EFC

Spray the primer onto each tab, in a ventilated area .
Wait until the primer is completely dry (approximately 20 minutes) before bonding the grille and the radiator grille .

URGENT : Do not touch the tabs after spraying the primer to avoid destroying the adhesive properties on bonding .

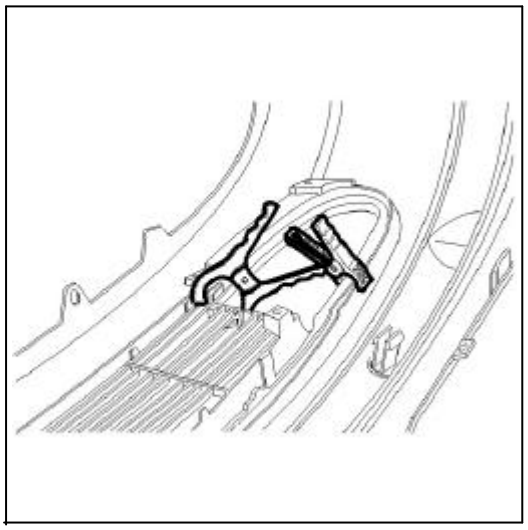

Figure : C4AF1EAC

Using pliers, retain the grille and the radiator grille in position positioned firmly on each bumper tab .

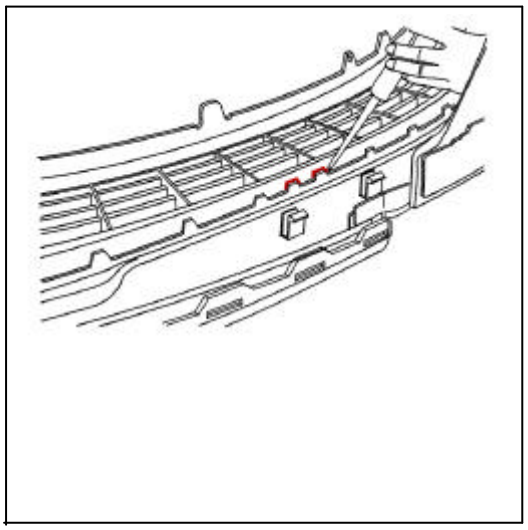

Figure : C4AF1EBC

Apply a bead of adhesive on each side of the tabs .

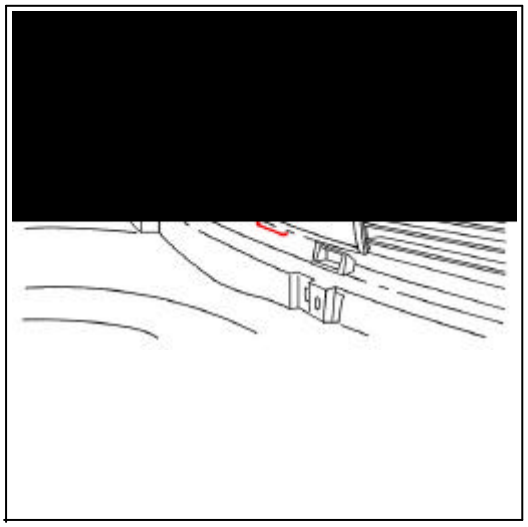

Figure : C4AF1ECC

CAUTION : Do not let the beads of adhesive run out onto the exterior surface of the bumper, when applied, to avoid appearance defects .

Wait approximately 1 hrs before handling the bumper .