REMOVAL - REFITTING : FASCIA VENT :

1. Recommended tools

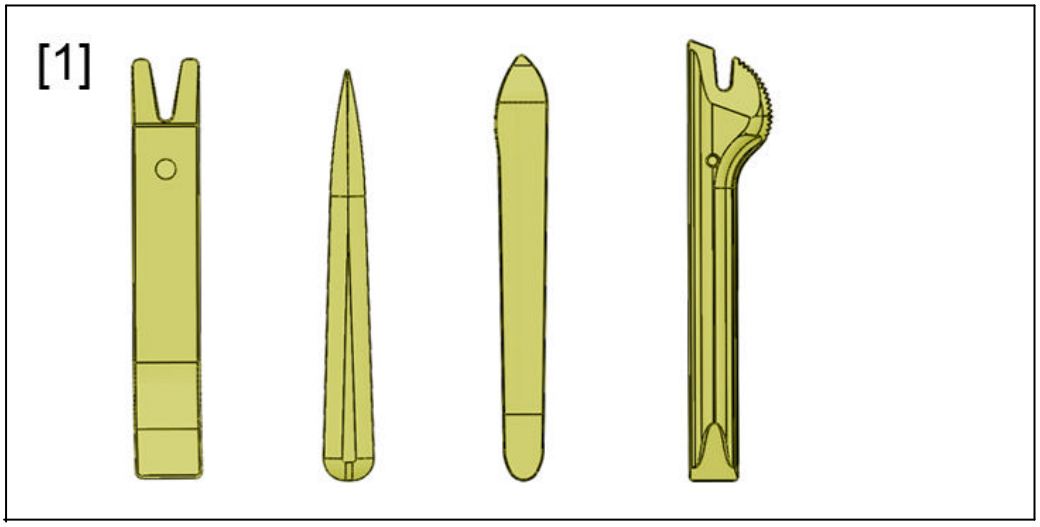

Figure : E5AP30WD

[1] Trim removal tools (-).1350-ZZ .

2. Removal

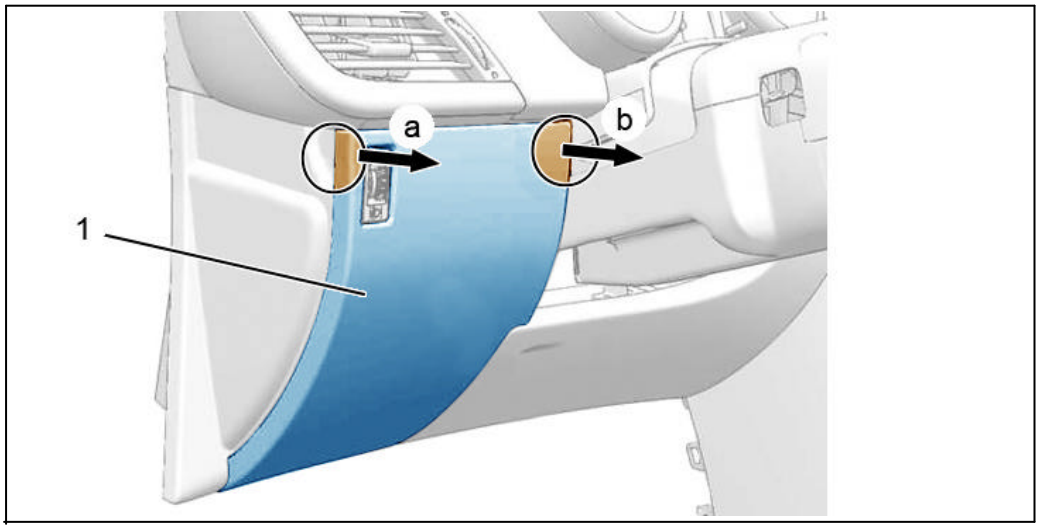

Figure : C5FP1B3D

Unclip the fuse box access trim (1) pulling the upper part towards you (At "a", "b") .
Remove the fuse box access trim (1) .

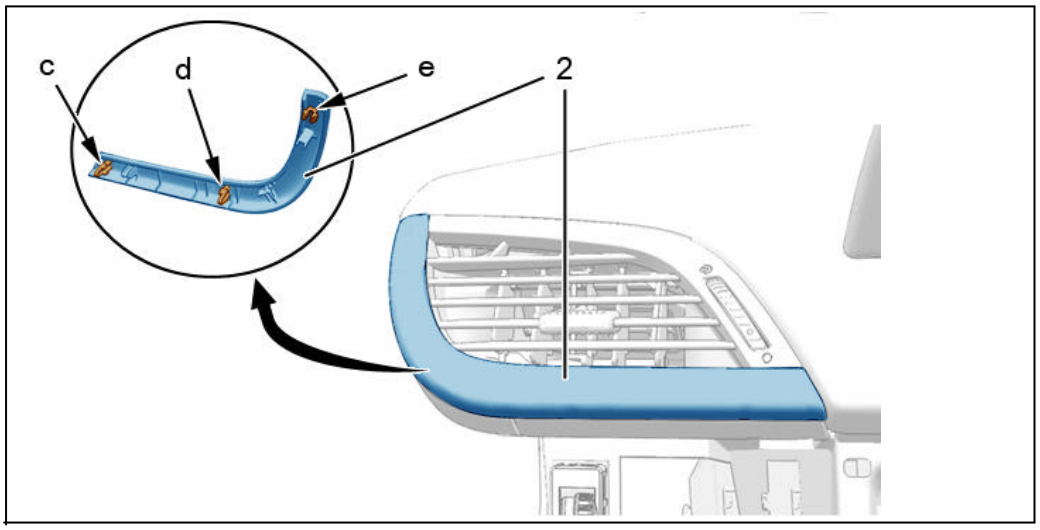

Figure : C5FP1B4D

Unclip the trim (2) (At "c", "d", "e") ; Using the tool [1] .
Remove the finisher (2) .

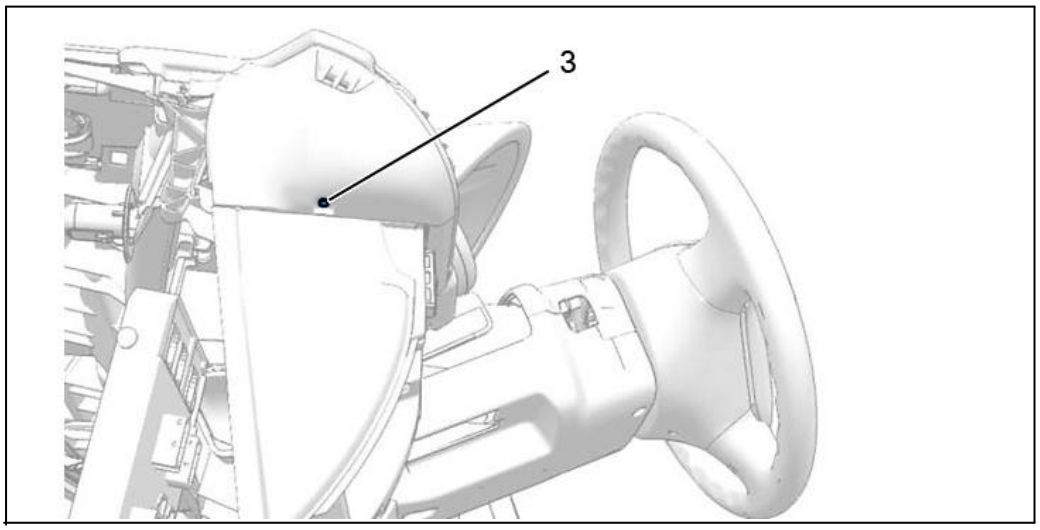

Figure : C5FP1B5D

Remove the bolt (3) .

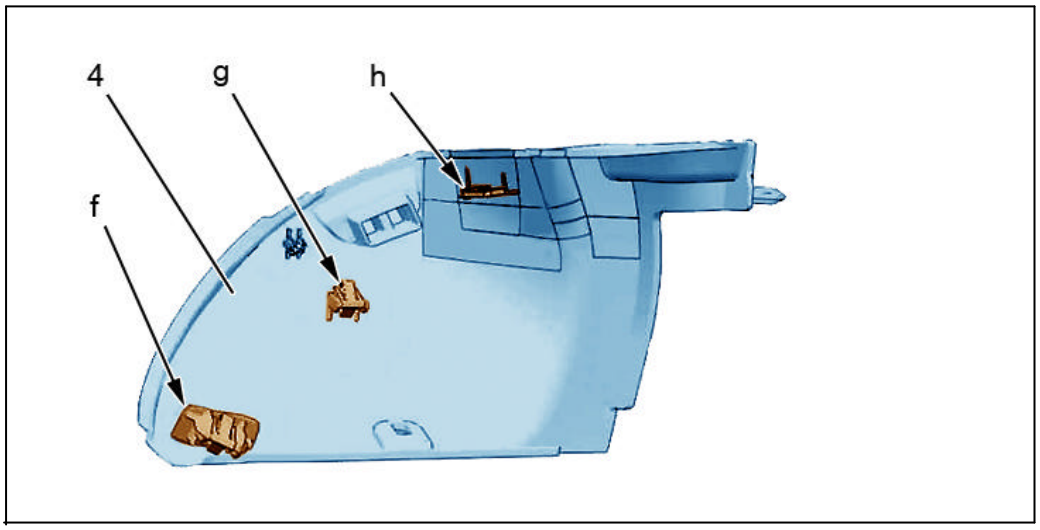

Figure : C5FP1B6D

Unclip the fascia side trim (4) (At "f", "g", "h") Using the tool [1] .
Remove the fascia side trim (4) .

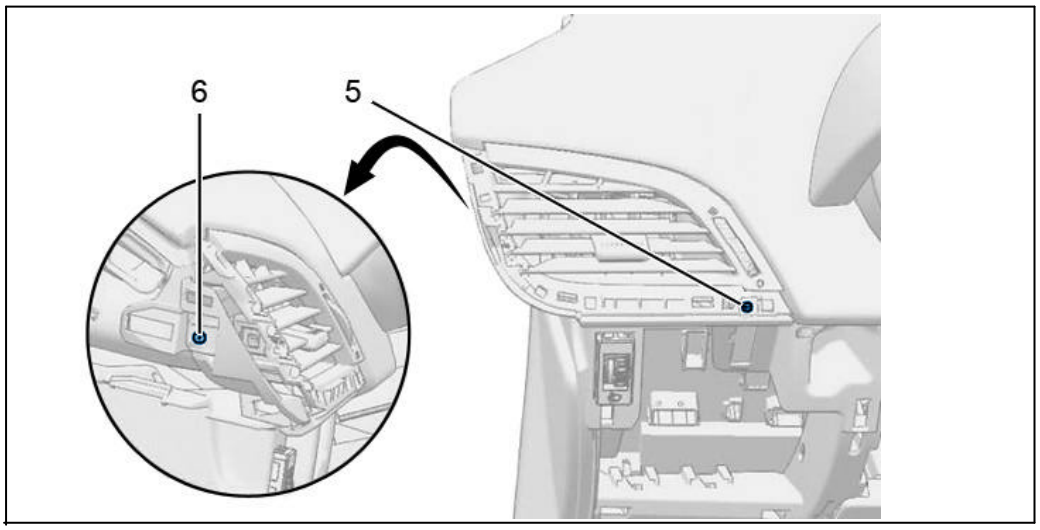

Figure : C5FP1B7D

Remove the bolts (5), (6) .

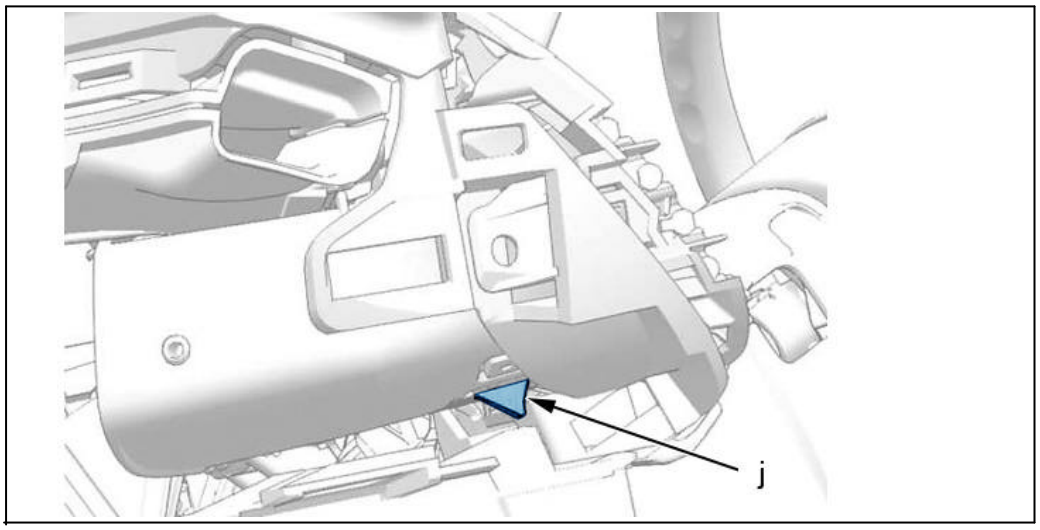

Figure : C5FP1B8D

Lift the tab of the clip (At "j") Using a thin screwdriver .

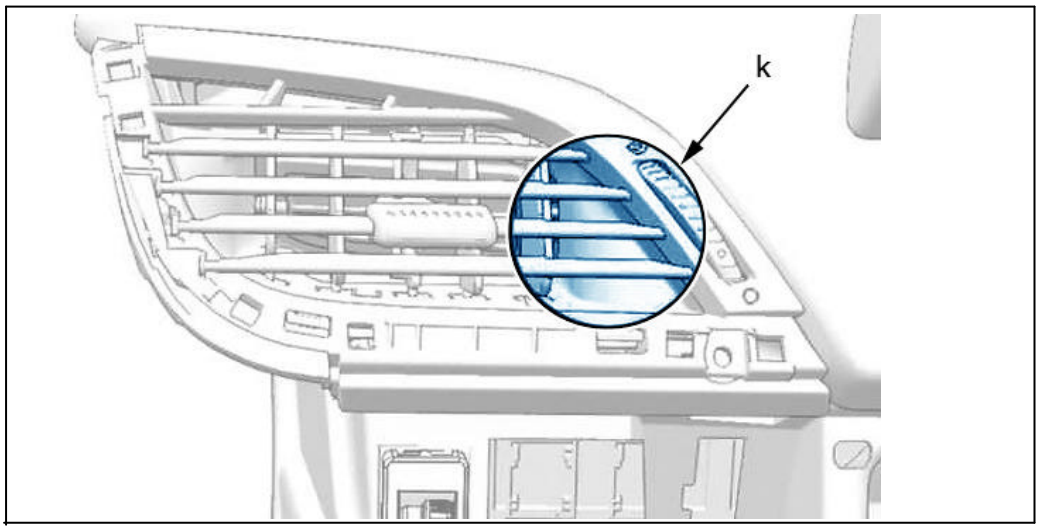

Figure : C5FP1B9D

Pass a finger through the fuse box access to push the rear of the fascia vent (At " k ") .

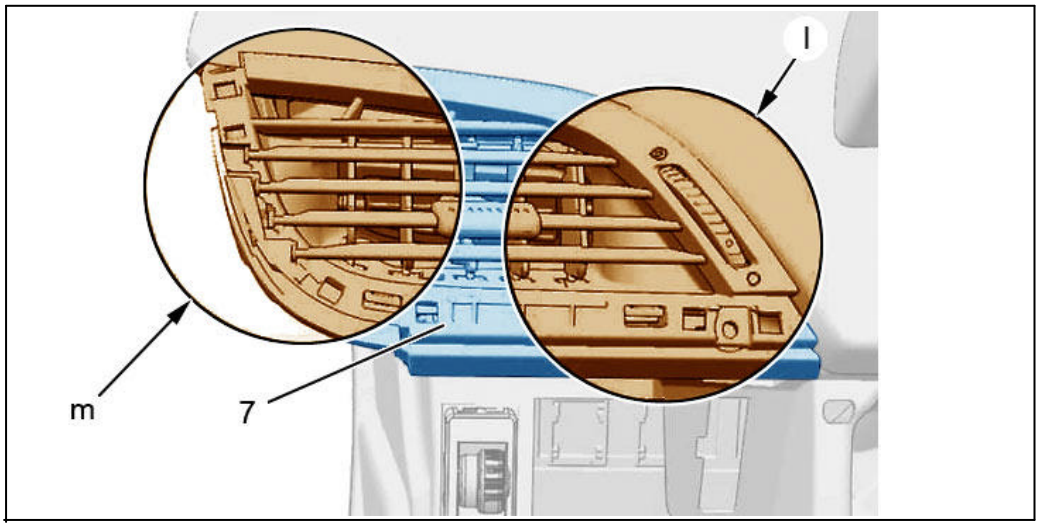

Figure : C5FP1BAD

Unclip the fascia vent (7) ; Using the tool [1] :

- The right-hand part (At " l ")
- The left-hand part (At " m ")

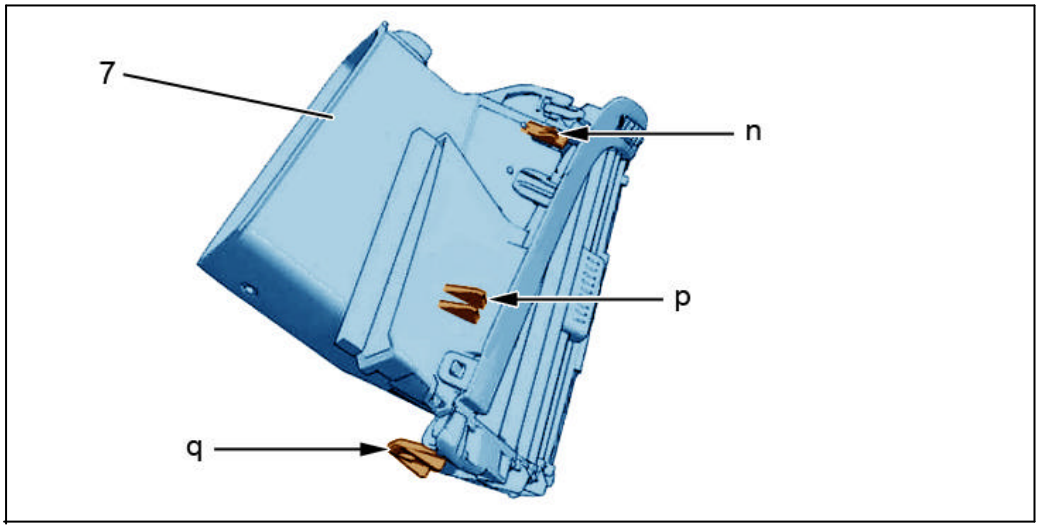

Figure : C5FP1BBD

Unclip the fascia vent (7) ; Using the tool [1] :

- The upper part (At "n", "p")
- The side part (At " q ")

Remove the fascia vent (7) .

3. Refitting

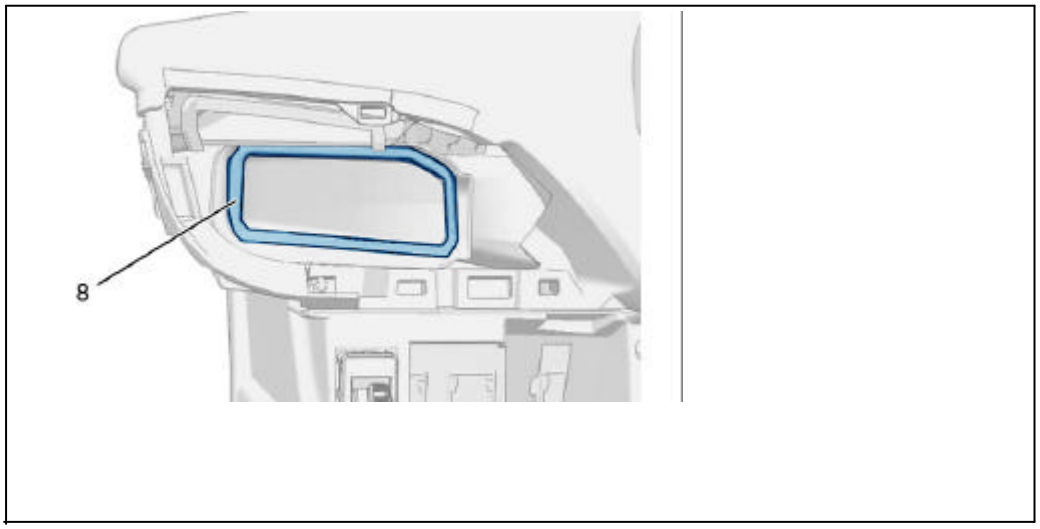

Figure : C5FP1BCD

Check the condition of the seal (8) (Replace if necessary) .

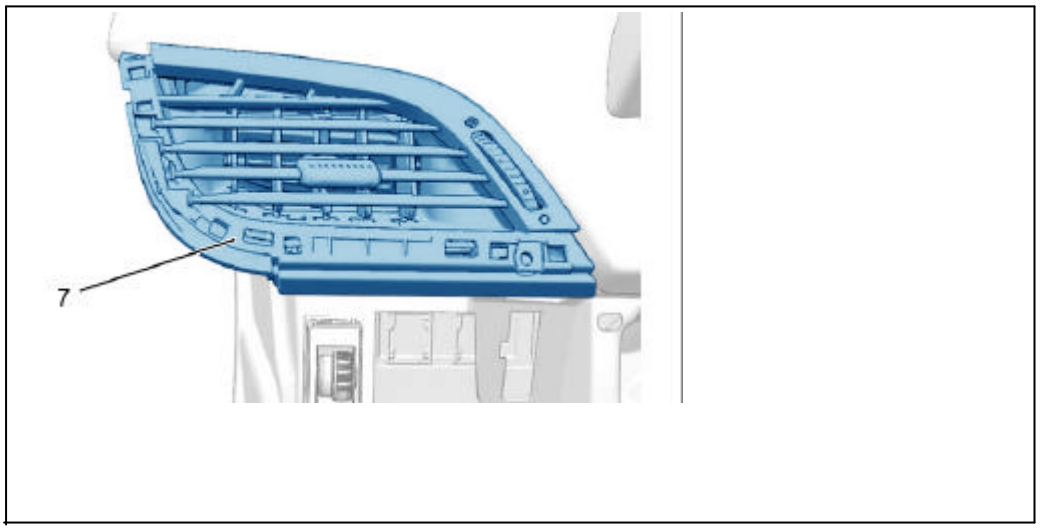

Figure : C5FP1BDD

Engage the fascia (7) vent and push to clip it .
Proceed in the reverse order to removal .
Check the electrical operation of the equipment .