BLEEDING : HYDRAULIC CLUTCH CONTROL :

GEARBOX BE4

1. Identification

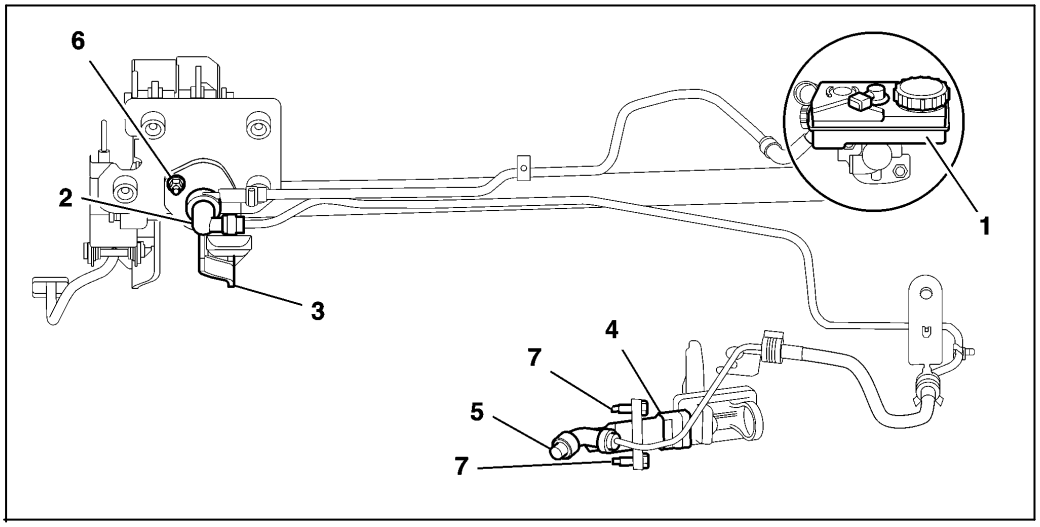

Figure : B2BK05ZD

(1) Brake fluid reservoir .
(2) Hydraulic control master cylinder .
(3) Clutch pedal .
(4) Hydraulic control slave cylinder .
(5) Bleed screw .

2. Bleeding

URGENT : Use only clean fluid free from bubbles ; Avoid any introduction of impurities into the hydraulic system .

Use only approved and recommended hydraulic fluid(s) : DOT4 .

URGENT : Do not use automatic bleeding equipment (risk of foaming of the fluid in the circuit) .

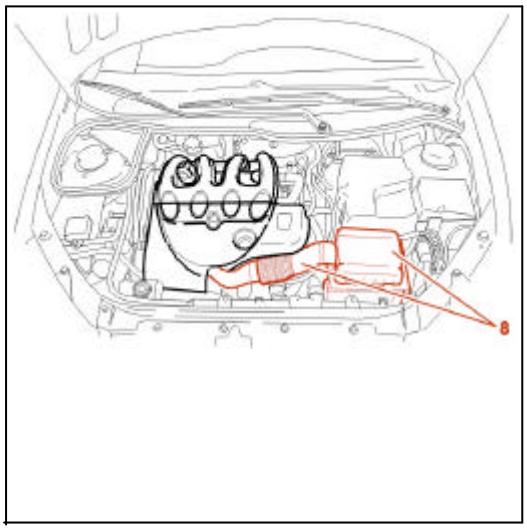

Figure : B2BK061C

DIESEL DW8 OR DW8B DIESEL OR TURBO DIESEL DW10TD

Remove the style cover (engine) .

Remove the air filter/connectors assembly (8) .

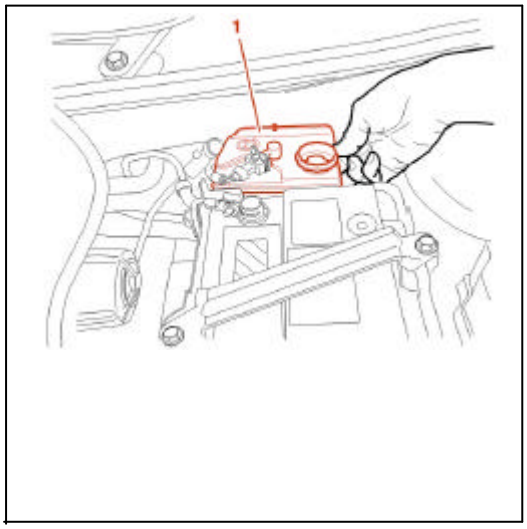

Figure : B2BK062C

Fill the reservoir with brake fluid (1) to its maximum capacity .

Move the reservoir to drive out the pockets of air .

Fill the reservoir with brake fluid (1) to its maximum capacity .

N.B. : It is possible to operate the clutch pedal 12 times without it being necessary to add brake fluid to the reservoir .

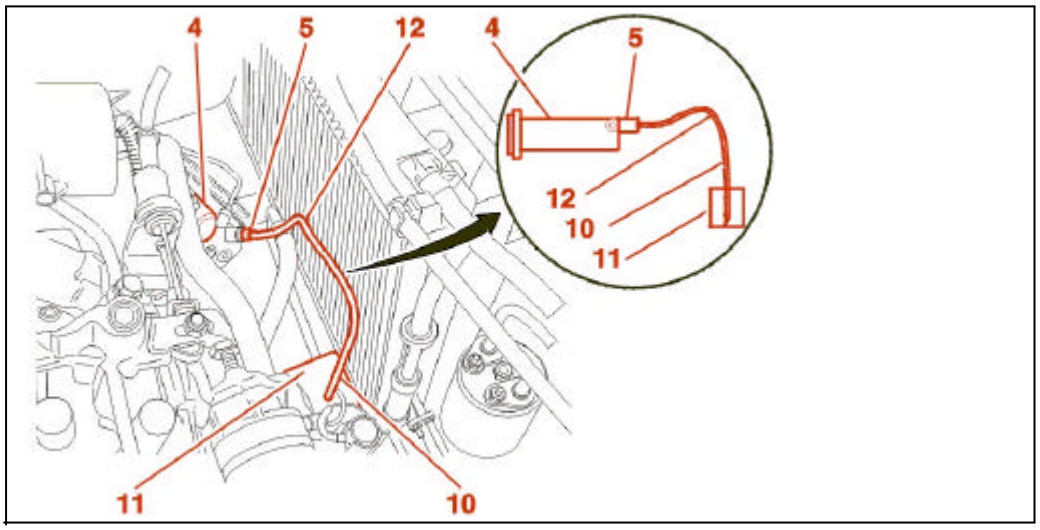

Figure : B2BK063D

Connect a transparent tube (10) to the bleed screw (5) and connect it to a receptacle (11) situated lower than the slave cylinder (4) .
Create a siphon (12) towards the top using the transparent pipe (10) which is in contact with the bottom of the receptacle .
Open the bleed screw (5) .

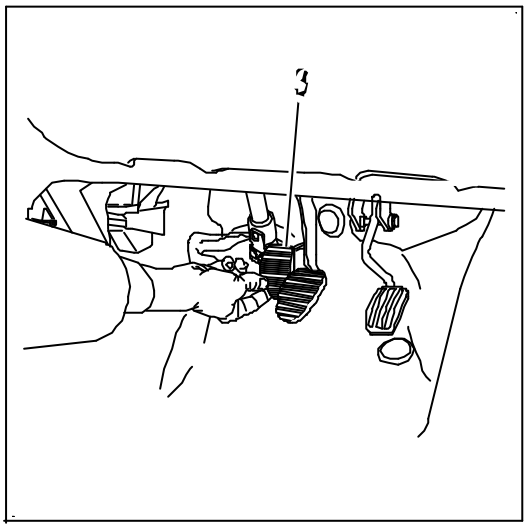

Figure : B2BK064C

Operate the clutch pedal (3) manually over its entire travel by 12 rapid forwards and backwards movements (1 forward and backward movement per second) .
Leave the clutch pedal (3) at the end of its travel on the last movement .
Close the bleed screw (5) .
Raise the clutch pedal (3) to its highest position .
Again : Fill the reservoir with brake fluid (1) to its maximum capacity .
Open the bleed screw (5) .
Operate the clutch pedal (3) manually over its entire travel by 12 rapid forwards and backwards movements (1 forward and backward movement per second) .
Leave the clutch pedal (3) at the end of its travel on the last movement .
Close the bleed screw (5) .
Raise the clutch pedal (3) to its highest position .
Top up the brake fluid level to the MAXI mark on the reservoir .

Release and engage the clutch rapidly 40 times (1 forward and backward movement per second) .
Start the engine .
Apply the handbrake .
Engage a gear .

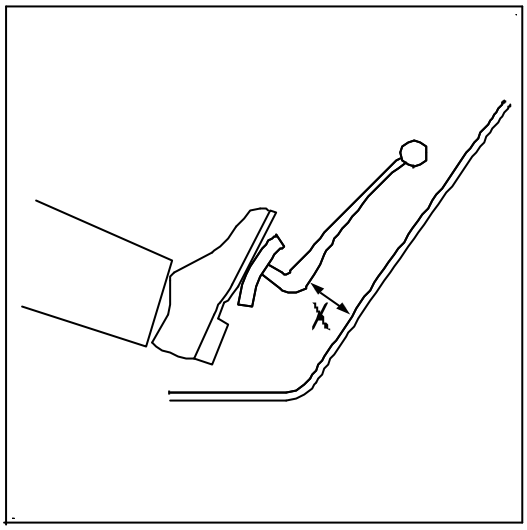

Figure : B2BK065C

Check that a start of friction of the clutch mechanism occurs at a distance X greater than or equal to 35 mm (Distance X is given as an indicator) .
If incorrect : Repeat the bleed operations .
Tightening torque(s) :

- Bolt(s) (5) to 0.75 m.daN
- Bolt(s) (6) to 2 m.daN
- Bolt(s) (7) to 2 m.daN