20/05/09 03L17A
TURBO CHARGER OIL RETURN HOSE

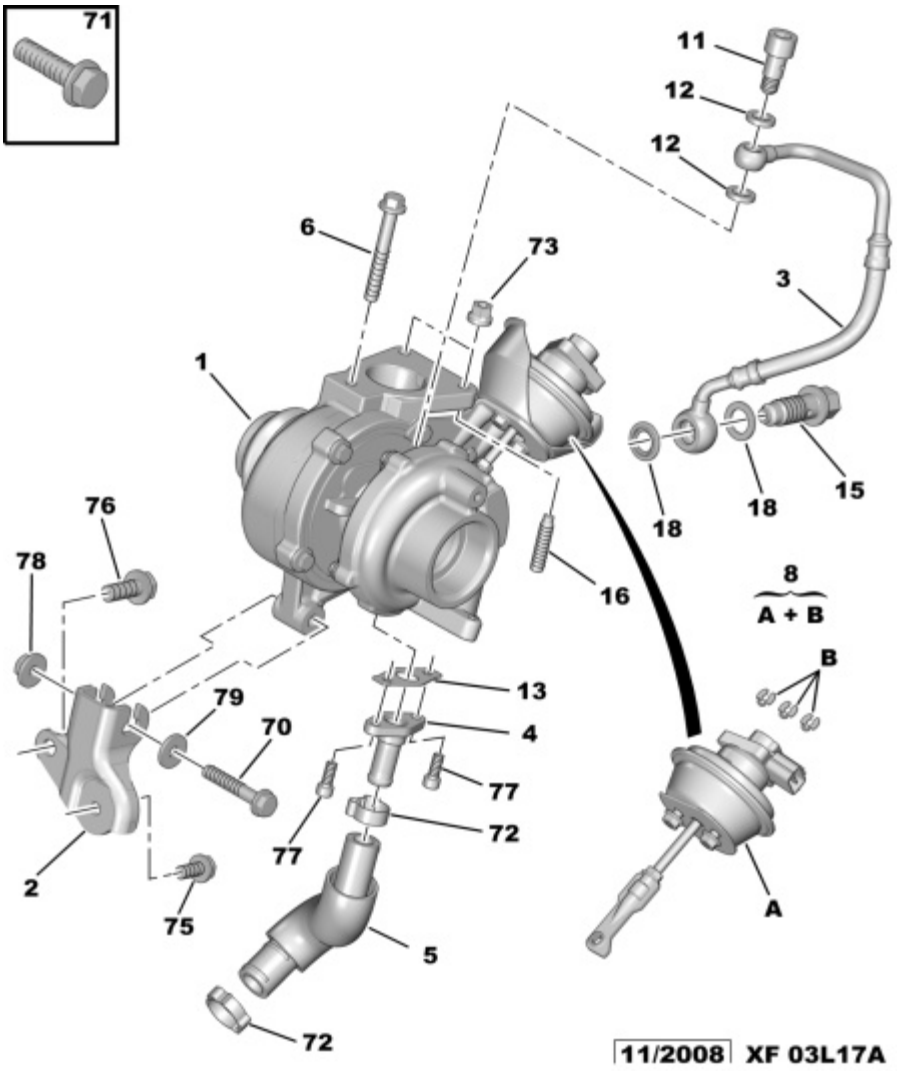

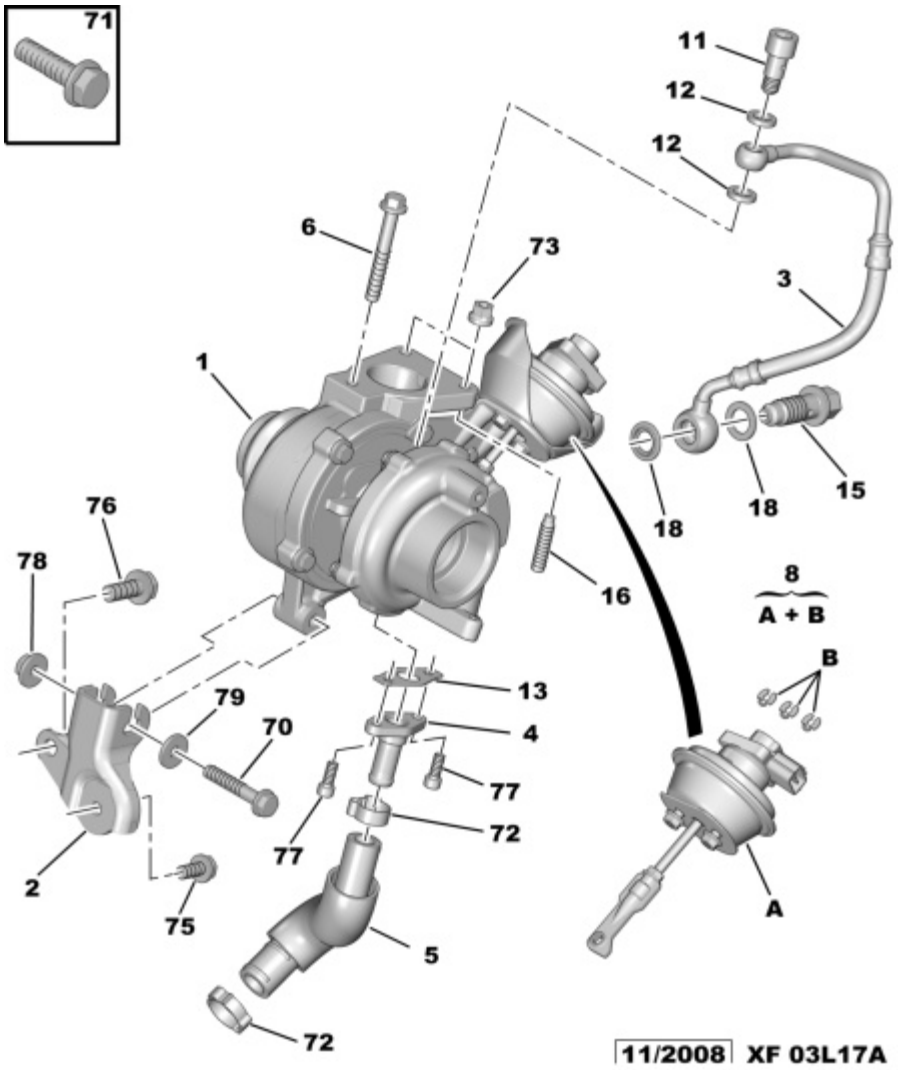

20/05/09 T5F 0 03L 17A		TURBO CHARGER OIL RETURN HOSE
01	0375 K8 01	TURBO NEW
	0375 K9 01	TURBO EXCHANGE GARRETT -
	▲0375 00 01	TURBO CARCASE
02	0377 63 01	BRACKET
03	0379 44 01	TURBO LUBE PIPE
04	0379 45 01	OIL RETURN PIPE
05	0381 25 01	OIL RETURN HOSE
06	0376 47 01	CAPSCREW HR EMB M8X125-63
08	0375 P0 01	TURBO KIT
11	0376 46 01	UNION SCREW 12X18 M10X100-27
12	0380 21 02	COPPER GASKET 12-18 EP 2,5
13	0380 33 01	TUBE SEAL
15	1164 46 01	UNION SCREW M16X150 LG 44,3-57,3
16	0376 41 02	SUPPORT STUD 8X125-25
18	0164 88 02	HOUSG PLUG SEAL 16X24-15
70	1803 F4 01	SELF-TAP SCREWS DIAM 8X125-50
71	6922 H6 01	SELF-TAP SCREWS M8X125-45
72	6981 H7 02	HOSE CLIP DIAM 16-27 LARG 9
73	6935 A5 02	SELF LOCKG NUT 8X125-11-11
75	6923 G6 01	SELF-TAP SCREWS 8X125-20
76	6921 C5 01	TAPER HEX SCREW M10X150-30
77		SOCKET SCREW

	6913 06 02	DIAM 6X100-16
78	6936 C6 01	WASHER-NUT 8X125-9,7-22
79	6947 79 01	PLAIN WASHER 8X22-2,5