REMOVE - REFIT : FRONT BRAKE PADS :

URGENT : Ensure that the precautions relating to safety and cleanliness are adhered to .

1. Recommended tools

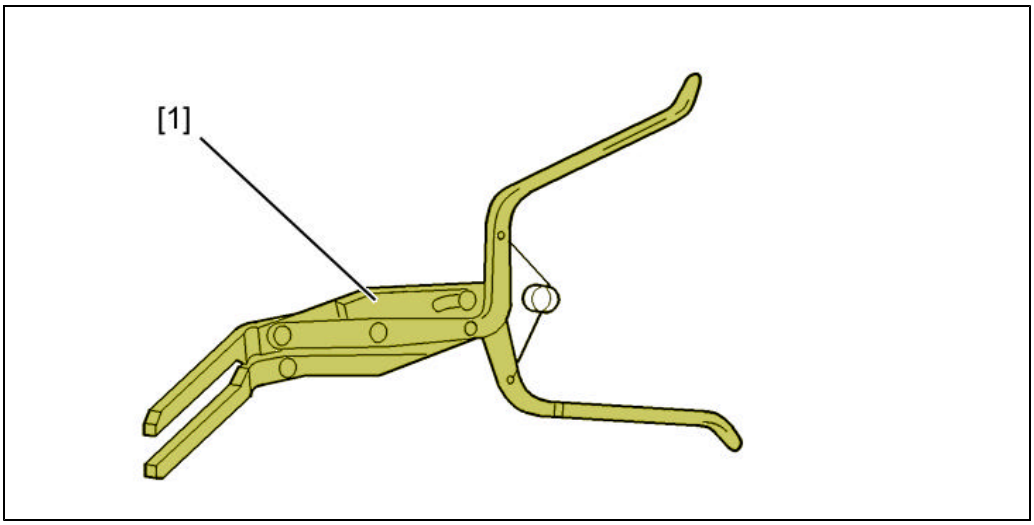

Figure : E5AP2X0D

[1] Pliers FACOM D60A .

2. Removing

If the brake fluid reservoir is at maximum level, remove its filter and partially drain the reservoir with the aid of a clean syringe in order to avoid it overflowing .
Release the front wheel bolts .
Lift and support the vehicle with the front wheels suspended .
Remove :

- The front wheel bolts
- The front wheels

2.1. TEVES assembly

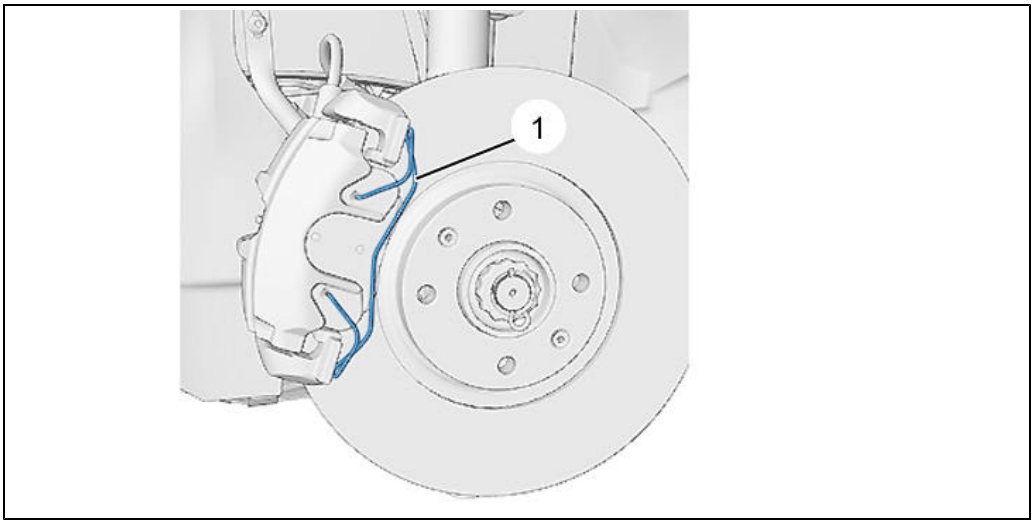

Figure : B3FP7QJD

Remove the spring (1) .

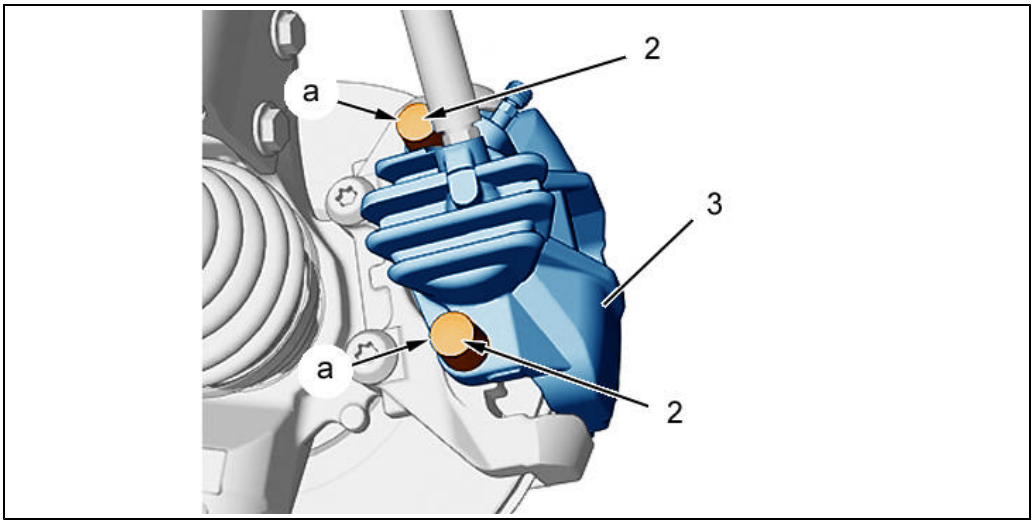

Figure : B3FP7QKD

Remove :

- The blanks (at " a ")
- The screws (2)

CAUTION : Take care not to twist the brake hose .

Move aside and suspend the brake caliper (3) .
Remove the brake pads .

2.2. BOSCH assembly

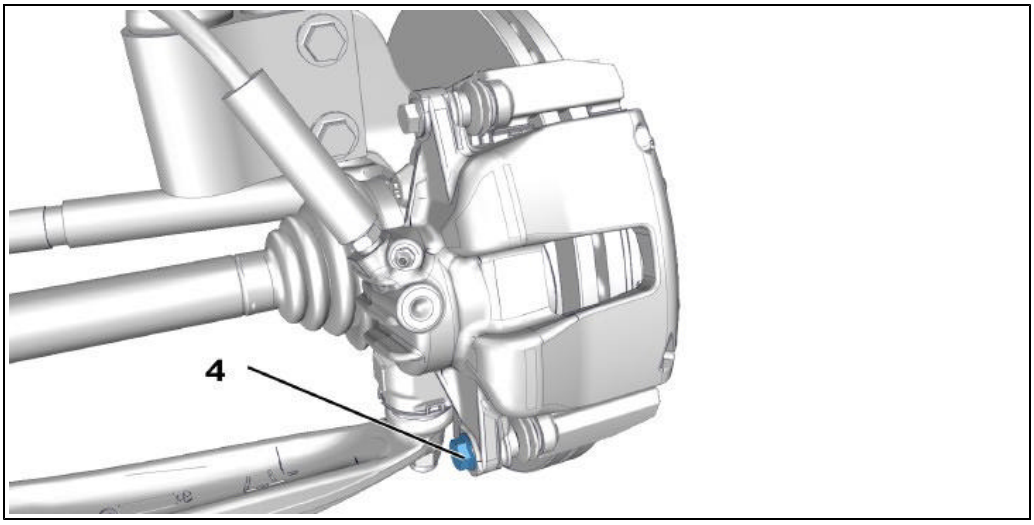

Figure : B3FM02RD

Remove the bolt (4) .

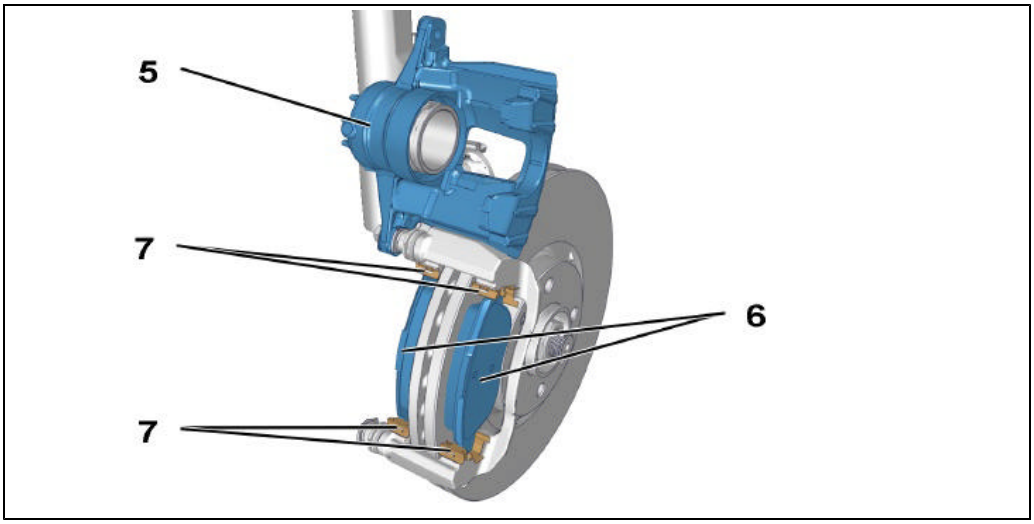

Figure : B3FM02SD

CAUTION : Take care not to twist the brake hose .

CAUTION : Move the caliper carefully so as not to put the upper slide under constraint .

Tilt the brake caliper (5) .
Remove :

- The brake pads (6)
- The brake pad support shims (7)

3. Cleaning

URGENT : Do not use compressed air to clean the brakes .

3.1. 1st possibility

Clean the brake disc and the brake caliper, using an approved brake cleaning product .
Leave to drip dry .
Wipe with a paper towel :

- The disk
- The brake caliper

3.2. 2nd possibility

Use dedusting equipment approved by the manufacturer .

4. Refitting

Visually check :

- The sealing around the brake caliper piston
- The condition and perfect fitting of the piston sealing gaiters
- **Wear of the brake discs**

Replace any defective parts .

CAUTION : No trace of grease, oil or lubricant can be tolerated on the brake pads .

Push the brake caliper piston ; Using tool [1] (Place spacer between the tool [1] and the brake pad to push the piston right back into its housing) .
Watch the level of the brake fluid .

4.1. BOSCH assembly

Refit :

- The brake pad support shims (7)
- The brake pads (6)

Fold back the brake caliper (5) .

CAUTION : On each removal ; Systematically replace the screw (4) .

Refit the new screw (4) ; Tighten to 3,1 ± 0,2 daNm .

4.2. TEVES assembly

Refit :

- The brake pads
- The brake caliper (3)
- The screws (2) ; Tighten to 2,7 ± 0,2 daNm
- The blanks (at " a ")
- The spring (1)

4.3. Common operations

Refit :

- The front wheels
- The front wheel bolts
- The vehicle to its wheels

Tighten the wheel bolts to 9 ± 1 daNm .

URGENT : Apply the brakes several times, gently and progressively, with the engine running, before driving the vehicle .

Check the brake fluid level and top up if necessary .